Note:

(1). "U" connects to 1, "V" connects to 3.
"V" connects to 7 for Heater (Option).

(2). SW comes On for "OPEN".
SW comes Off for "CLOSE".

(3). Using less than 5A current for "A,B,C,D,E,F".

(4). For 3-Phase voltage, connect any two of the U, V, W to 1&3.

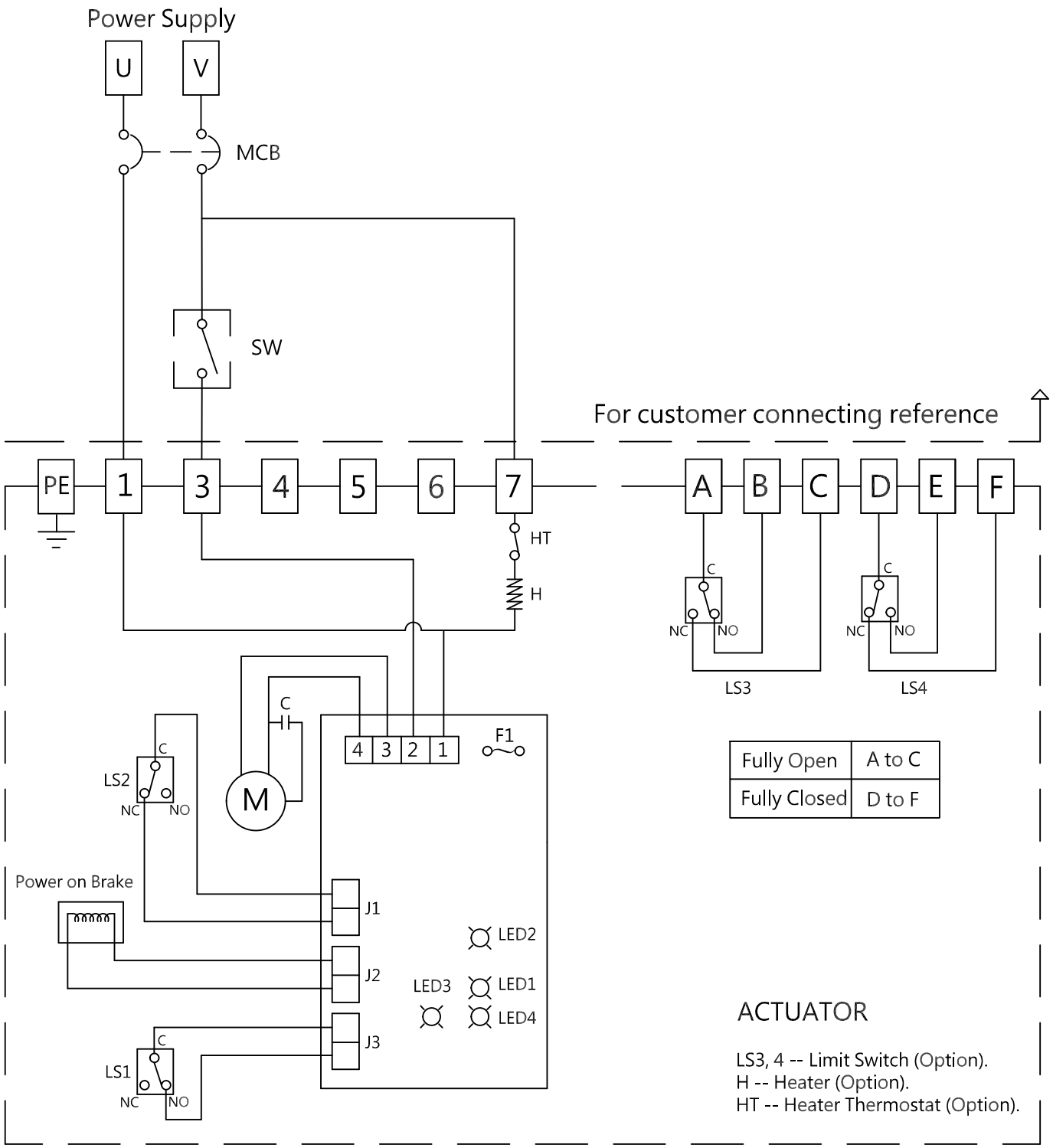

Wiring Diagram NO: 07-001-18-03-01-02-3-001

Rev 1.0	Signature	Date	SE500 Power Supply : 220~240VAC 3-Phase ON/OFF Control 50% Duty Cycle
Designed			
Drawn	Wen Yao	2018/08/02	
Checked	Ming Hung	2018/08/15	
Approved			

SUNYEH
SUN YEH ELECTRICAL IND. CO., LTD.
TEL: +886-4-2698-5666
FAX: +886-4-2698-1188